FIXUP

SUITABLE
FOR ALL BUILDINGS

EASY
MAINTENANCE

100%
ALUMINUM



NO WELDING
FAST ASSEMBLY

LIGHTWEIGHT
MATERIAL
FAST ASSEMBLY no crane or heavy equipment required

OPTIMAL
ADAPTABILITY
to **YOUR JOB SITE** thanks to various access control systems and ladder exit solutions

PARTS IN STOCK
IN STORE
FAST DELIVERY to your job sites

COMPLIANT
ONTARIO
Occupational Health and Safety Act — Regulation 851 (R.R.O. 1990), sections 18 to 19
ANSI A14.3 (design reference)

ECHELLE CANADA

DESIGNER – MANUFACTURER – INSTALLER

Access and safety at **height**

FIXUP

SAFETY SOLUTIONS BASED ON THE HEIGHT TO BE ACCESSED

Ladders, stairs and ramps.
Fixed ladders in Ontario must be vertical, with rest platforms spaced no more than 9 metres (30 ft) apart and the ladder offset at each platform.
O. Reg. 851, s. 18.

ACCESS AT HEIGHT REQUIREMENTS UNDER CURRENT REGULATIONS:

- **Up to 5 metres (16 ft)**
no safety cage required.

- **Above 5 metres (16 ft)**
a safety cage is required, starting no more than 2.2 m above grade and extending at least 90 cm above the top landing.
Towers, water tanks, chimneys or similar structures: a vertical lifeline or rigid rail system may replace the cage, subject to engineering validation.
O. Reg. 851, s. 18
.



Fixed ladder



Lifeline

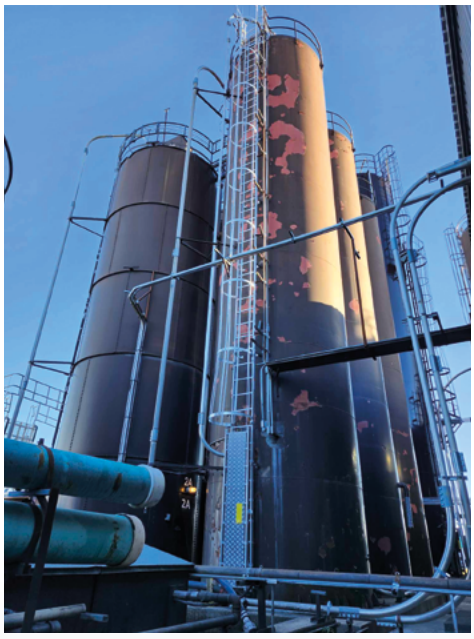

Fixed ladder

VERTICAL LIFELINES & RIGID RAIL SYSTEMS FOR FIXED LADDERS

CSA Z259.2.5 : VERTICAL LIFELINE SYSTEMS

CSA Z259.2.4 : VERTICAL RIGID RAIL SYSTEMS

ECHELLE CANADA supplies vertical cable lifeline and rigid rail systems designed in accordance with CSA Z259.2.5 and CSA Z259.2.4. Our systems are lightweight, easy to install, and compatible with most fixed ladder configurations, providing reliable vertical fall protection.

Under Ontario Regulation 851, vertical lifelines or rigid rail systems may replace a safety cage only in the limited cases provided by the regulation (towers, tanks, chimneys and similar structures) or where supported by project-specific engineering justification.

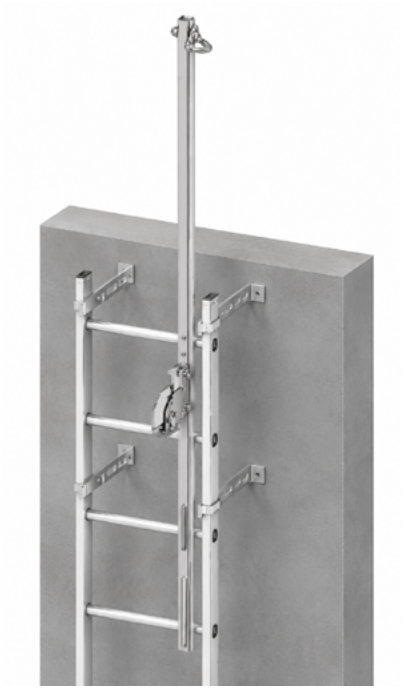



The upper and lower supports are attached to reinforced ladder rungs in accordance with the manufacturer's installation instructions and engineering recommendations.

An intermediate cable guide is required for cable lengths exceeding 6.7 m (22 ft) to maintain proper cable alignment and system performance.



REGULATORY REQUIREMENTS FOR FIXED LADDERS

Rest platforms required at intervals not exceeding 9 m (30 ft), with the ladder offset at each platform

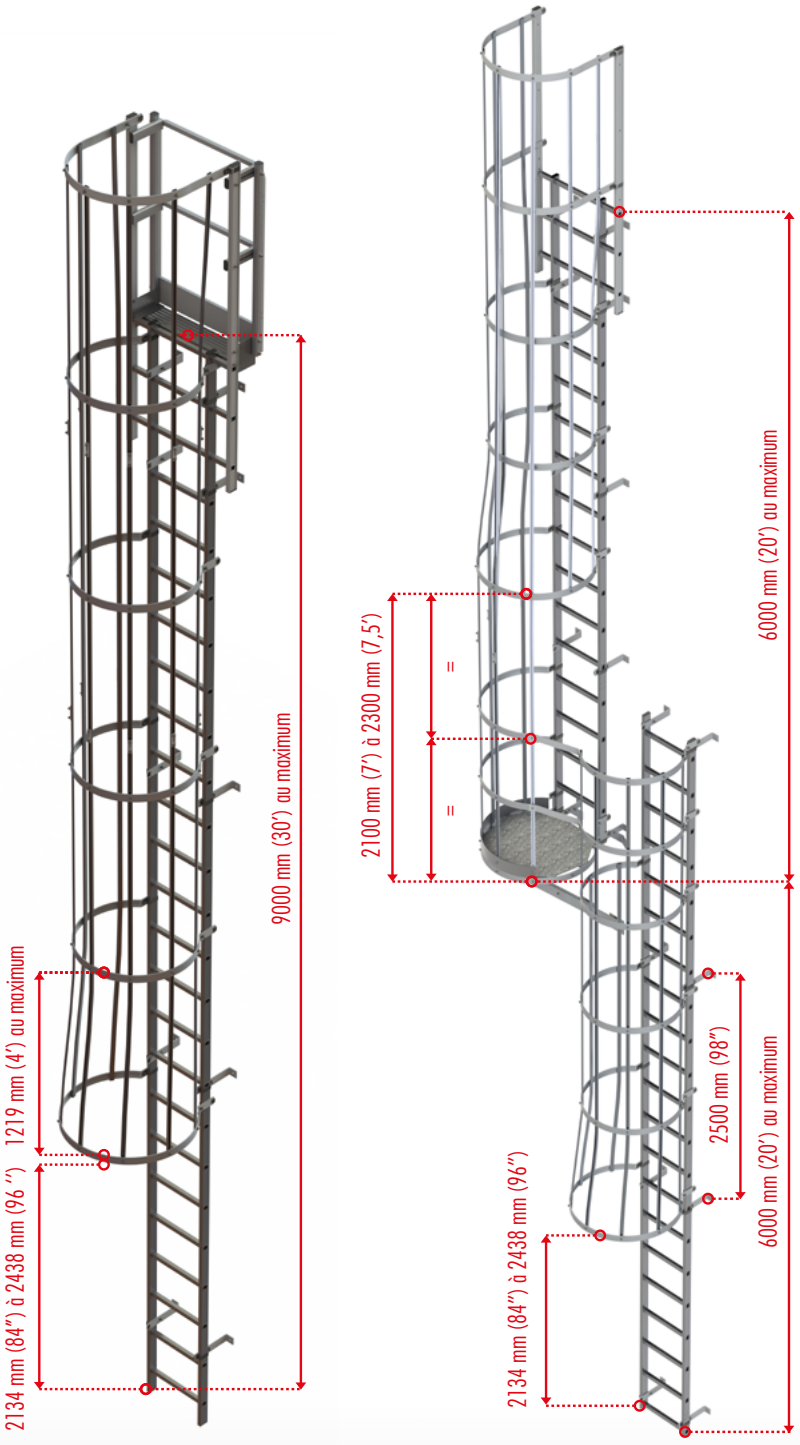

FIXING BRACKETS

- **DISTANCE BETWEEN FIXING BRACKETS :**
  2000 mm max. (79 in / ~6.5 ft).

- **POSITION OF LOWER FIXING BRACKETS :**
  370 mm max. from the access level (14.5 in).

- **POSITION OF UPPER FIXING BRACKETS :**
  250 mm max. from the landing area (10 in)
  810 mm max. between the last two fixing brackets (32 in / ~2.7 ft).

HOOPS

- **DISTANCE BETWEEN HOOPS :**
  1219 mm max. (48 in / 4 ft).

- **POSITION OF THE FIRST HOOP :**
  Cage starting no more than 2.2 m (2200 mm) above grade.

- **HOOP REINFORCEMENT :**
  Above the first hoop of the initial ladder section and above the first hoop of any subsequent sections.

Cage starting no more than 2.2 m (2200 mm) above grade

LAST RUNG

- **POSITION OF THE LANDING STEP :**
  At the same level as the landing area.

ACCESS THROUGH HATCH

For any project or technical study, please contact us

info@echellecanada.ca

Discover this dual safety solution combining a fixed ladder and a fixed LEEVEL aluminum platform.

Fixed ladders with hatch access are ideal for **accessing smoke vents**, **manholes or roof access points under a skylight**



Specific case

This solution combines a fixed ladder equipped with a retractable exit and a fixed LEEVEL platform with an integrated hatch.

It provides safe access in technical environments requiring access through a hatch (manhole, skylight, etc.).

CONCEPTION ECHELLE CANADA

FIXUP

PARTS LIST
FIXED LADDERS

ACCESS



Retractable access system (without ladder)
A0002616 / 51634



Retractable access system (with single ladder)
A0010067 / 51650

LADDERS



Fixed ladder 3000 mm (10 ft)
A0008123 / EECACRINE300



Ladder coupling sleeves
A0002610 / 51567



Lower ladder foot (each)
A0002643 / 78045



Upper ladder caps
A0002642 / 77120

FIXINGS



Standard fixing brackets (pair)
A0002594 / 50139



Reinforced fixing brackets (pair)
A0002624 / 51766



Adjustable fixing brackets 150 / 300 mm 6–12 in (pair)
A0002611 / 51571



Adjustable fixing brackets 250 / 400 mm 10–16 in (pair)
A0002612 / 51571L

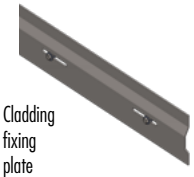

Cladding fixing plate
A0009001 / PLAQUEFIXBARDAGE



Aluminum pop rivet (each), Ø 5/16 in with neoprene washer (7.7 mm)
A0008881 / RIVETPOP77



Fixing kit for cladding plate (16 self-drilling screws + 16 sealing washers)
A0006882 / KITVISBARDAGE



Sealing tape roll – 33 ft (10 m)
A0008888 / BANDEETANCHE10M



Ground fixing brackets (pair)
A0007338 / 50138

EXITS



Standard exit – width 28 in (700 mm)
A0008268 / EECASORTIE



Exit with gate and landing step – width 28 in (700 mm)
A0008269 / EECASORTIEMARCHE

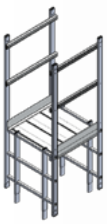

Parapet crossover without gate – width 28 in / length 29 in (700 mm / 725 mm)
A0008270 / EECASORTIEPAS725

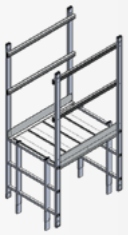

Parapet crossover without gate – width 28 in / length 37 in (700 mm / 950 mm)
A0008271 / EECASORTIEPAS950

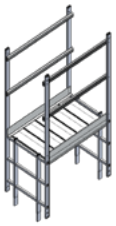

Parapet crossover without gate – width 28 in / length 46 in (700 mm / 1175 mm)
A0008272 / EECASORTIEPAS1175



Safety gate – 30 in (770 mm)
A0006227 / 51636L770



Retractable exit arm – wall-mounted
A0002646 / CROSSEMU

Retractable exit arm – ladder-mounted
A0000044 / CROSSE

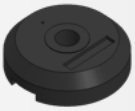

Resin base for parapet return
A0007383 / A0007383

ACCESSORIES



Adjustable hook bar
A0006480 / BARREREGLABLE



Galvanized ladder hooks Ø 2 in (50 mm)
A0004837 / 30030002

LOCKING ACCESS



Locking door without cover
A0010086 / 51765N



Locking cover
A0010050 / 5550



Padlocks for locking
A0006285 / PADLOCKS

HOOPS



1/2 entry hoop – Canada
A0008332 / EECADEMIARCEAUCENTRE



Plate for double hoop
A0008265 / EECAPLAT



1/2 intermediate hoop – Canada
A0008331 / EECADEMIARCEAUINTER



Intermediate hoop
A0007880 / EECA50254



Entry hoop
A0007879 / EECA50254E



Exit flared hoop
A0007881 / EECA52209

LANDINGS



Fixed landing with bracket
A0008264 / EECAPALIER



Toe board for landing hoop
A0008267 / EECAPLINTHE



Rail – length 9 ft (2800 mm)
A0003004 / FIL2800



Rail connector
A0002598 / 50255

INSTALLATION EXAMPLE: FIXED LADDER WITH VERTICAL LIFELINE

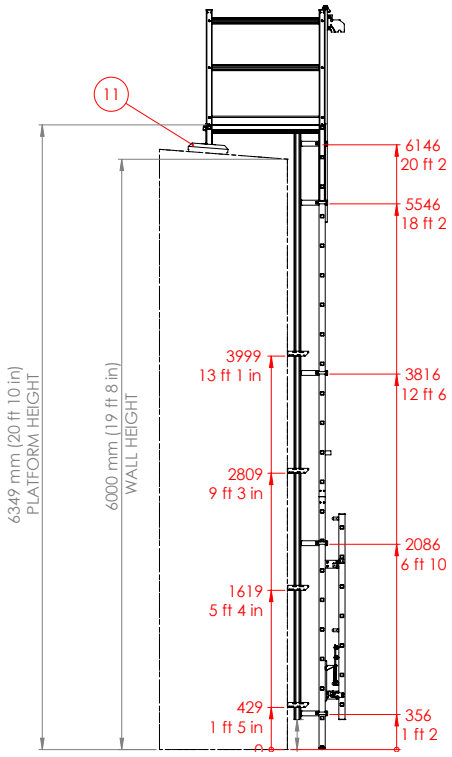

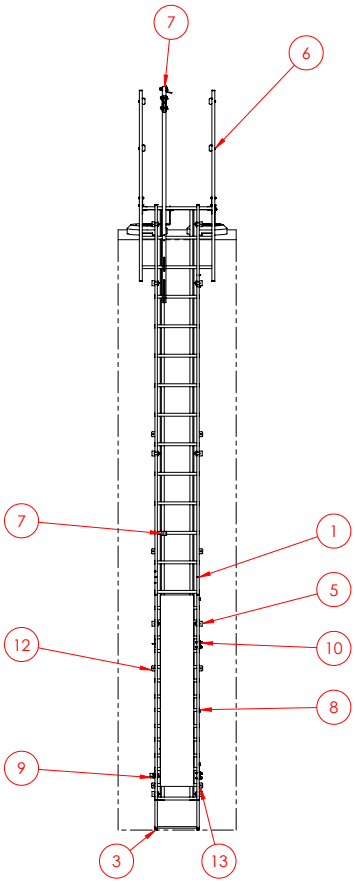

Notes

- Only one person at a time may use the ladder.
- A maximum spacing of 78 3/4 in (2000 mm) between anchors is recommended.
- An annual inspection is required to check anchors, torque values and the overall integrity of the ladder to ensure compliance and safety.
- The user must connect (dorsal attachment) to the transition ring with their lanyard before opening the spring-loaded gate.
- The user must attach their sternal slider to the lifeline before disconnecting from the transition ring. Reverse these steps to exit the ladder safely.
- The installation of hatch guardrails is recommended to secure access (not included in the customer order).

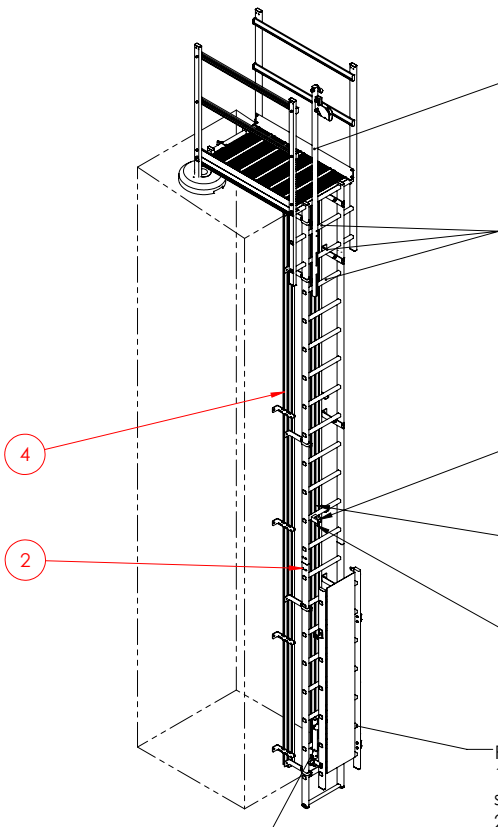

LIFELINE KIT LAD-SAF
Top support #6116631
Fixed to the three indicated rungs

3x RUNG REINFORCEMENTS CONSISTING OF:
1-Threaded rod: TH50875 x 5.5 in, stainless steel or zinc (7/8"-9 NC x 144 x 850 mm)
2- 2x flat washers: WF3160875, stainless steel or zinc 7/8"
3- 2x lock washers: NF50875, stainless steel or zinc 7/8"-9
4- 2x nuts: WL50875, stainless steel or zinc 7/8"

INTERMEDIATE CABLE GUIDE
#6100400 at mid-span

SLIDERS x3
#6160054

GALVANIZED STEEL CABLE 1X7
∅3/8" #6104040

RUNG REINFORCEMENT CONSISTING OF:
1-Threaded rod: TH50875 x 5.5 in, stainless steel or zinc (7/8"-9 NC x 144 x 550 mm)
2-2x flat washers: WF3160875, stainless steel or zinc 7/8"
3-2x lock washers: NF50875, stainless steel or zinc 7/8"-9
4-2x nuts: WL50875, stainless steel or zinc 7/8"

1. Fixed ladder – 10 ft (3000 mm) EECA *(A0008123)* - Qty 2
2. Ladder coupling sleeves (pair) *(A0002610)* - Qty 1
3. Lower ladder foot *(A0002643)* - Qty 2
4. 70 upright *(A0010620)* - Qty 2
5. Standard fixing brackets *(A0002594)* - Qty 5
6. Parapet crossover – width 28 in / length 46 in (700 mm / 1175 mm) *(A0006306)* - Qty 1
7. LAD-SAF LIFELINE KIT *(6116631)* - Qty 1
8. Locking door without cover - Canada *(A0010086)* - Qty 1
9. Padlock for locking door / anti-theft *(A0006285)* - Qty 1
10. Offset kit for locking door *(A0013114)* - Qty 1
11. Resin base for parapet return *(A0007383)* - Qty 2
12. Wall mounting bracket 40°–55° right *(A0003083)* - Qty 4
13. Wall mounting bracket 40°–55° left *(A0003084)* - Qty 4
14. Ground fixing brackets *(A0007338)* - Qty 1

REQUEST A QUOTE,
A PRELIMINARY 3D LAYOUT
AND PRICING WITHIN 48H !

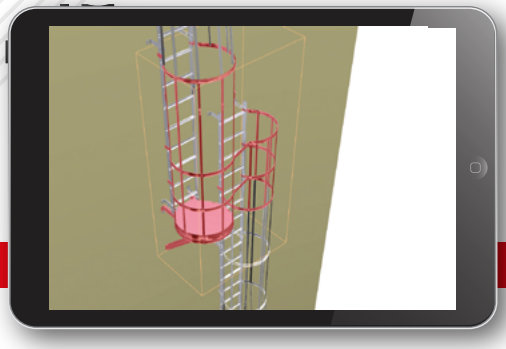







IN-HOUSE DESIGN OFFICE

TESTING CENTER

QUALITY MANAGER

OUR SHOP

TORONTO
2 Principal Rd Unit 1-2
Scarborough
ON M1R 4E8
CANADA

ECHELLE CANADA

Access and safety at **height**

info@echellecanada.ca
Tél : **416 780 1114**

VISIT US ONLINE

WWW.**ECHELLECANADA**.CA